# Elektrisk og elektronisk utrustning for Trudelutt

Versjoner av: 15. april 2022

| | |
|---|---|
| Engineer: lhh | M/Y TRUDELUTT |
| Drawn by: lhh | |
| R&D CHK: | TITLE: Elektrisk og elektronisk utrustning — Size: A4 |
| Path: | Changed by: lhh — Date Changed: — Time: — Version: — REV — Drawing Number: — Page: 1 |

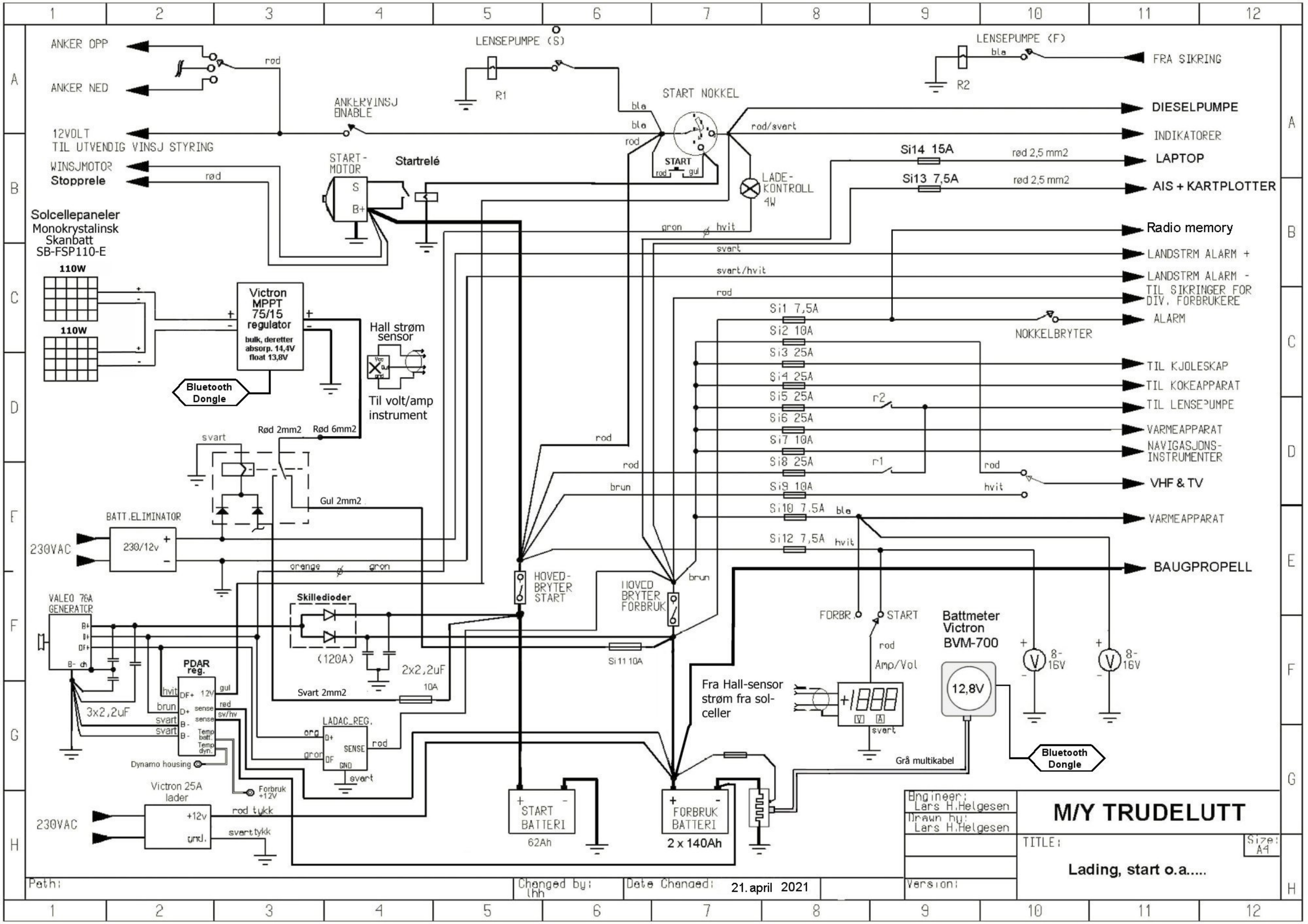
ANKER OPP
ANKER NED
12VOLT
TIL UTVENDIG VINSJ STYRING
WINSJMOTOR
Stopprele
rod
rød
ANKERVINSJ ENABLE
LENSEPUMPE (S)
R1
START NOKKEL
START
rod
gul
bla
bla
rod
rod/svart
LENSEPUMPE (F)
bla
R2
FRA SIKRING
DIESELPUMPE
INDIKATORER
LAPTOP
AIS + KARTPLOTTER
Si14 15A
rød 2,5 mm2
Si13 7,5A
rød 2,5 mm2
START-MOTOR
S
B+
Startrelé
LADE-KONTROLL 4W
Solcellepaneler
Monokrystalinsk
Skanbatt
SB-FSP110-E
110W
110W
Victron MPPT 75/15 regulator
bulk, deretter absorp. 14,4V float 13,8V
Bluetooth Dongle
Hall strøm sensor
Til volt/amp instrument
gron
hvit
svart
svart/hvit
rod
Radio memory
LANDSTRM ALARM +
LANDSTRM ALARM -
TIL SIKRINGER FOR DIV. FORBRUKERE
ALARM
NOKKELBRYTER
Si1 7,5A
Si2 10A
Si3 25A
Si4 25A
Si5 25A
Si6 25A
Si7 10A
Si8 25A
Si9 10A
Si10 7,5A
Si12 7,5A
r2
r1
TIL KJOLESKAP
TIL KOKEAPPARAT
TIL LENSEPUMPE
VARMEAPPARAT
NAVIGASJONS-INSTRUMENTER
VHF & TV
VARMEAPPARAT
BAUGPROPELL
hvit
ble
hvit
svart
Rød 2mm2
Rød 6mm2
Gul 2mm2
BATT.ELIMINATOR
230/12v
230VAC
orange
gron
HOVED-BRYTER START
HOVED BRYTER FORBRUK
brun
Skilledioder
(120A)
2x2,2uF
10A
Svart 2mm2
Si11 10A
VALEO 76A GENERATOR
B+
D+
DF+
B- ch
PDAR reg.
DF+
12V
D+
sense
B-
sense
B-
Temp batt.
Temp dyn.
hvit
brun
svart
svart
gul
rød
sv/hv
3x2,2uF
Dynamo housing
LADAC_REG.
D+
SENSE
DF
GND
org
gron
rod
svart
Victron 25A lader
+12v
gnd.
230VAC
rod tykk
svart tykk
Forbruk +12V
START BATTERI
62Ah
FORBRUK BATTERI
2 x 140Ah
FORBR.
START
rod
Amp/Vol
Battmeter Victron BVM-700
12,8V
8-16V
8-16V
Fra Hall-sensor strøm fra sol-celler
Grå multikabel
Bluetooth Dongle
Engineer: Lars H.Helgesen
Drawn by: Lars H.Helgesen
M/Y TRUDELUTT
TITLE:
Size: A4
Lading, start o.a.....
Path:
Changed by: lhh
Date Changed: 21. april 2021
Version:

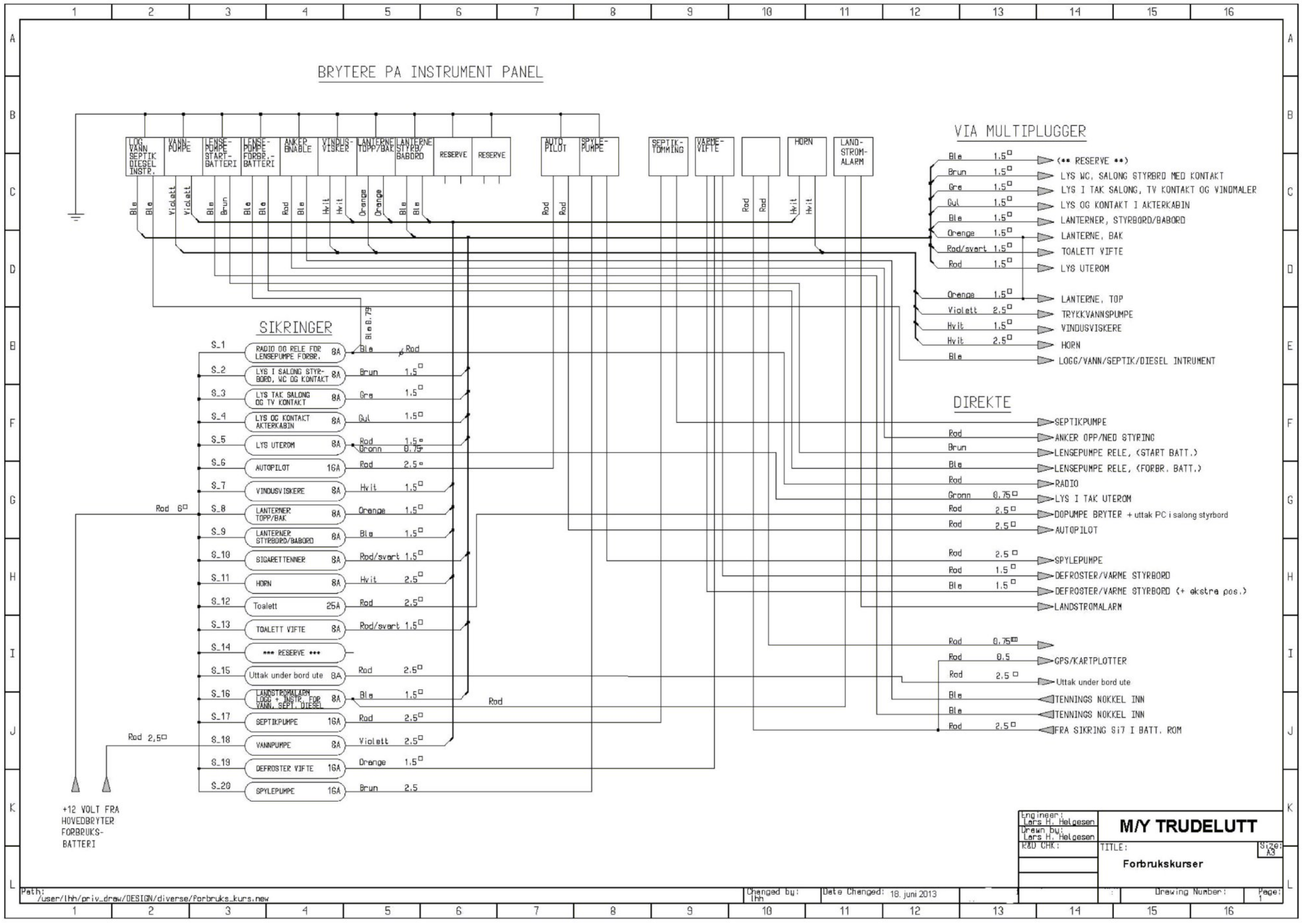
BRYTERE PA INSTRUMENT PANEL
LOG VANN SEPTIK DIESEL INSTR.
VANN-POMPE
LENSE-POMPE START-BATTERI
LENSE-POMPE FORBR.-BATTERI
ANKER ENABLE
VINDUS-VISKER
LANTERNE TOPP/BAK
LANTERNE STYRB/ BABORD
RESERVE
RESERVE
AUTO PILOT
SPYLE-PUMPE
SEPTIK-TOMMING
VARME-VIFTE
HORN
LAND-STROM-ALARM
VIA MULTIPLUGGER
Ble 1.5 (** RESERVE **)
Brun 1.5 LYS WC, SALONG STYRBRD MED KONTAKT
Gre 1.5 LYS I TAK SALONG, TV KONTAKT OG VINDMALER
Gul 1.5 LYS OG KONTAKT I AKTERKABIN
Ble 1.5 LANTERNER, STYRBORD/BABORD
Orange 1.5 LANTERNE, BAK
Rod/svart 1.5 TOALETT VIFTE
Rod 1.5 LYS UTEROM
Orange 1.5 LANTERNE, TOP
Violett 2.5 TRYKKVANNSPUMPE
Hvit 1.5 VINDUSVISKERE
Hvit 2.5 HORN
Ble LOGG/VANN/SEPTIK/DIESEL INTRUMENT
SIKRINGER
S_1 RADIO OG RELE FOR LENSEPUMPE FORBR. 8A Ble 0.75 Rod
S_2 LYS I SALONG STYR-BORD, WC OG KONTAKT 8A Brun 1.5
S_3 LYS TAK SALONG OG TV KONTAKT 8A Gre 1.5
S_4 LYS OG KONTAKT AKTERKABIN 8A Gul 1.5
S_5 LYS UTEROM 8A Rod 1.5 Gronn 0.75
S_6 AUTOPILOT 16A Rod 2.5
S_7 VINDUSVISKERE 8A Hvit 1.5
S_8 LANTERNER TOPP/BAK 8A Orange 1.5
S_9 LANTERNER STYRBORD/BABORD 8A Ble 1.5
S_10 SIGARETTENNER 8A Rod/svart 1.5
S_11 HORN 8A Hvit 2.5
S_12 Toalett 25A Rod 2.5
S_13 TOALETT VIFTE 8A Rod/svart 1.5
S_14 *** RESERVE ***
S_15 Uttak under bord ute 8A Rod 2.5
S_16 LANDSTROMALARM LOGG + INSTR. FOR VANN, SEPT. DIESEL 8A Ble 1.5
S_17 SEPTIKPUMPE 16A Rod 2.5
S_18 VANNPUMPE 8A Violett 2.5
S_19 DEFROSTER VIFTE 16A Orange 1.5
S_20 SPYLEPUMPE 16A Brun 2.5
Rod 6
Rod 2,5
Rod
+12 VOLT FRA HOVEDBRYTER FORBRUKS-BATTERI
DIREKTE
SEPTIKPUMPE
Rod ANKER OPP/NED STYRING
Brun LENSEPUMPE RELE, (START BATT.)
Ble LENSEPUMPE RELE, (FORBR. BATT.)
Rod RADIO
Gronn 0.75 LYS I TAK UTEROM
Rod 2.5 DOPUMPE BRYTER + uttak PC i salong styrbord
Rod 2.5 AUTOPILOT
Rod 2.5 SPYLEPUMPE
Rod 1.5 DEFROSTER/VARME STYRBORD
Ble 1.5 DEFROSTER/VARME STYRBORD (+ ekstra pos.)
LANDSTROMALARM
Rod 0.75
Rod 0.5 GPS/KARTPLOTTER
Rod 2.5 Uttak under bord ute
Ble TENNINGS NOKKEL INN
Ble TENNINGS NOKKEL INN
Rod 2.5 FRA SIKRING Si7 I BATT. ROM
Engineer: Lars H. Helgesen
Drawn by: Lars H. Helgesen
R&D CHK:
M/Y TRUDELUTT
TITLE:
Forbrukskurser
Size: A3
Path: /user/lhh/priv_draw/DESIGN/diverse/forbruks_kurs.new
Changed by: lhh
Date Changed: 18. juni 2013
Drawing Number:
Page: 1

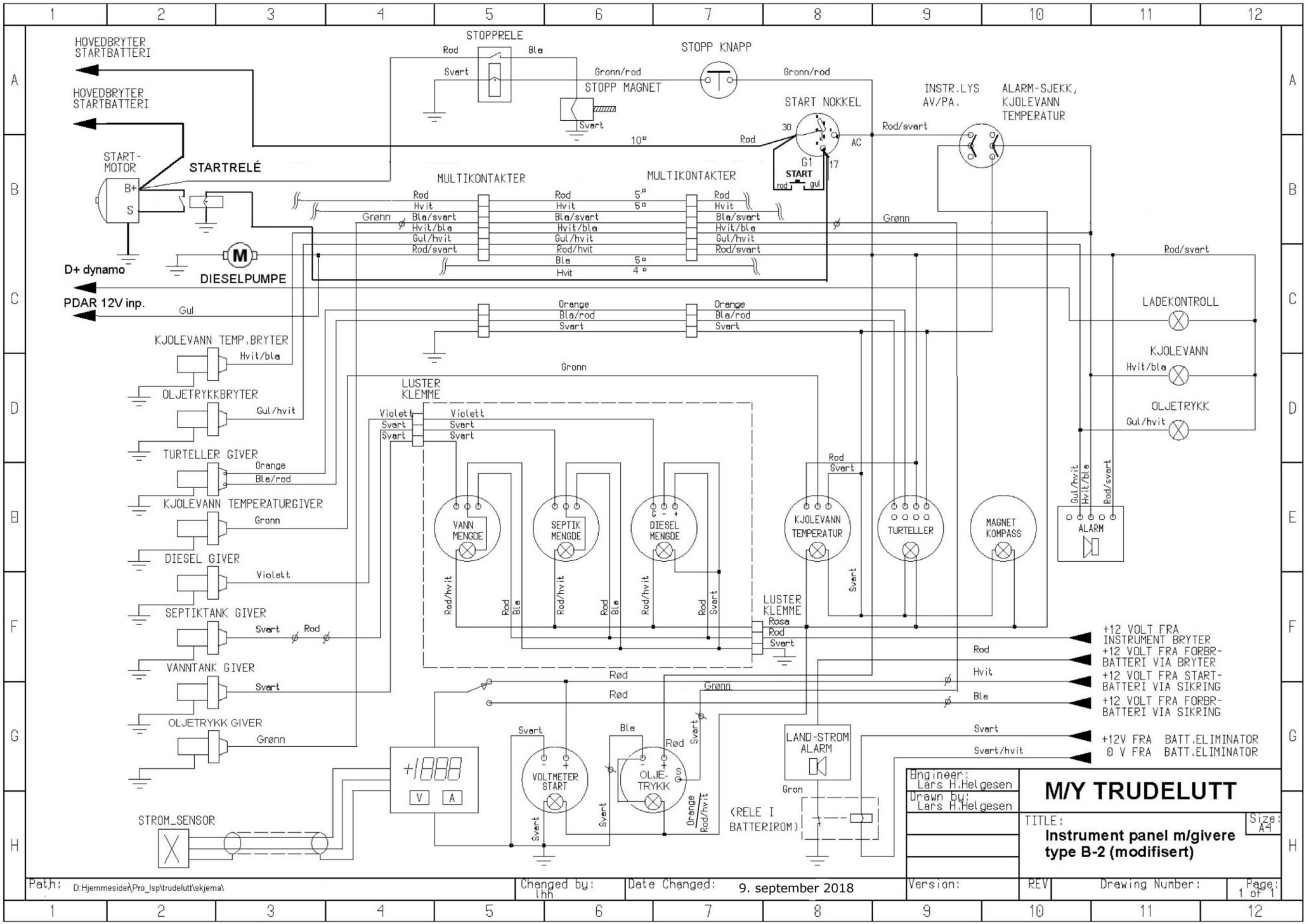
HOVEDBRYTER STARTBATTERI
HOVEDBRYTER STARTBATTERI
STOPPRELE
Rod
Bla
Svart
STOPP KNAPP
Gronn/rod
Gronn/rod
STOPP MAGNET
Svart
START NOKKEL
30
AC
17
G1
START
rod
gul
10°
Rod
INSTR.LYS AV/PA.
ALARM-SJEKK, KJOLEVANN TEMPERATUR
Rod/svart
START-MOTOR
B+
S
STARTRELÉ
MULTIKONTAKTER
MULTIKONTAKTER
Rod
Hvit
Bla/svart
Hvit/bla
Gul/hvit
Rod/svart
Grønn
Rod
Hvit
Bla/svart
Hvit/bla
Gul/hvit
Rod/hvit
Bla
Hvit
5°
5°
5°
4°
Rod
Hvit
Bla/svart
Hvit/bla
Gul/hvit
Rod/svart
Grønn
Rod/svart
D+ dynamo
DIESELPUMPE
PDAR 12V inp.
Gul
Orange
Bla/rod
Svart
Orange
Bla/rod
Svart
LADEKONTROLL
KJOLEVANN
Hvit/bla
OLJETRYKK
Gul/hvit
KJOLEVANN TEMP.BRYTER
Hvit/bla
OLJETRYKKBRYTER
Gul/hvit
TURTELLER GIVER
Orange
Bla/rod
KJOLEVANN TEMPERATURGIVER
Gronn
DIESEL GIVER
Violett
SEPTIKTANK GIVER
Svart
Rod
VANNTANK GIVER
Svart
OLJETRYKK GIVER
Grønn
Gronn
LUSTER KLEMME
Violett
Svart
Svart
Violett
Svart
Svart
VANN MENGDE
SEPTIK MENGDE
DIESEL MENGDE
KJOLEVANN TEMPERATUR
TURTELLER
MAGNET KOMPASS
ALARM
Rod
Svart
Svart
Rod/hvit
Rod
Bla
Rod/hvit
Rod
Bla
Rod/hvit
Rod
Svart
LUSTER KLEMME
Rosa
Rod
Svart
Gul/hvit
Hvit/bla
Rod/svart
+12 VOLT FRA INSTRUMENT BRYTER
Rod
+12 VOLT FRA FORBR-BATTERI VIA BRYTER
Hvit
+12 VOLT FRA START-BATTERI VIA SIKRING
Bla
+12 VOLT FRA FORBR-BATTERI VIA SIKRING
Svart
+12V FRA BATT.ELIMINATOR
Svart/hvit
0 V FRA BATT.ELIMINATOR
Rød
Rød
Grønn
Svart
Bla
Rød
Svart
Svart
Bla
Svart
Orange
Rod/hvit
VOLTMETER START
OLJE-TRYKK
S
LAND-STROM ALARM
Gron
(RELE I BATTERIROM)
+1888
V
A
STROM_SENSOR
Engineer: Lars H.Helgesen
Drawn by: Lars H.Helgesen
M/Y TRUDELUTT
TITLE:
Instrument panel m/givere type B-2 (modifisert)
Size: A4
Path: D:Hjemmesider\Pro_Isp\trudelutt\skjema\
Changed by: lhh
Date Changed: 9. september 2018
Version:
REV
Drawing Number:
Page: 1 of 1

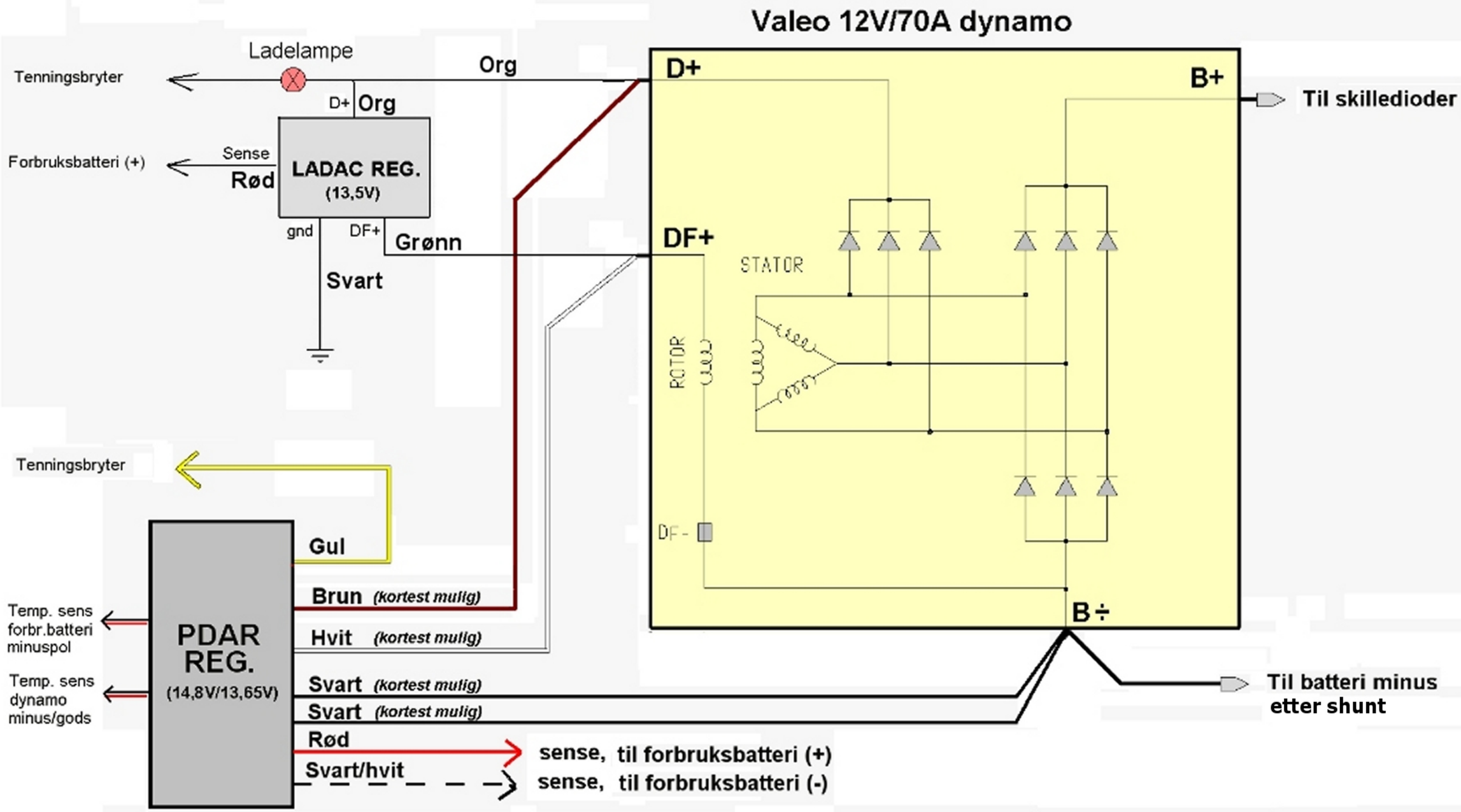


| | |
|---|---|
| Engineer: thh | M/Y TRUDELUTT |
| Drawn by: thh | |
| R&D CHK: | TITLE: VALEO DYNAMO 12V/70A PDAR regulator Ladac backup — Size: A4 |

Path: D:\Hjemmesider\trudelutt\skjema\FSP | Changed by: thh | Date Changed: 21. oktober 2020 | Time: | Version: | REV | Drawing Number: | Page:

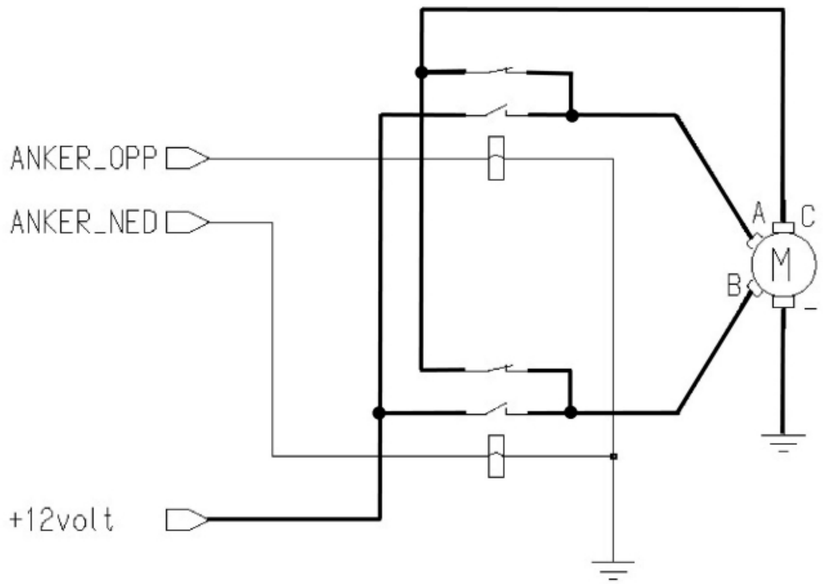


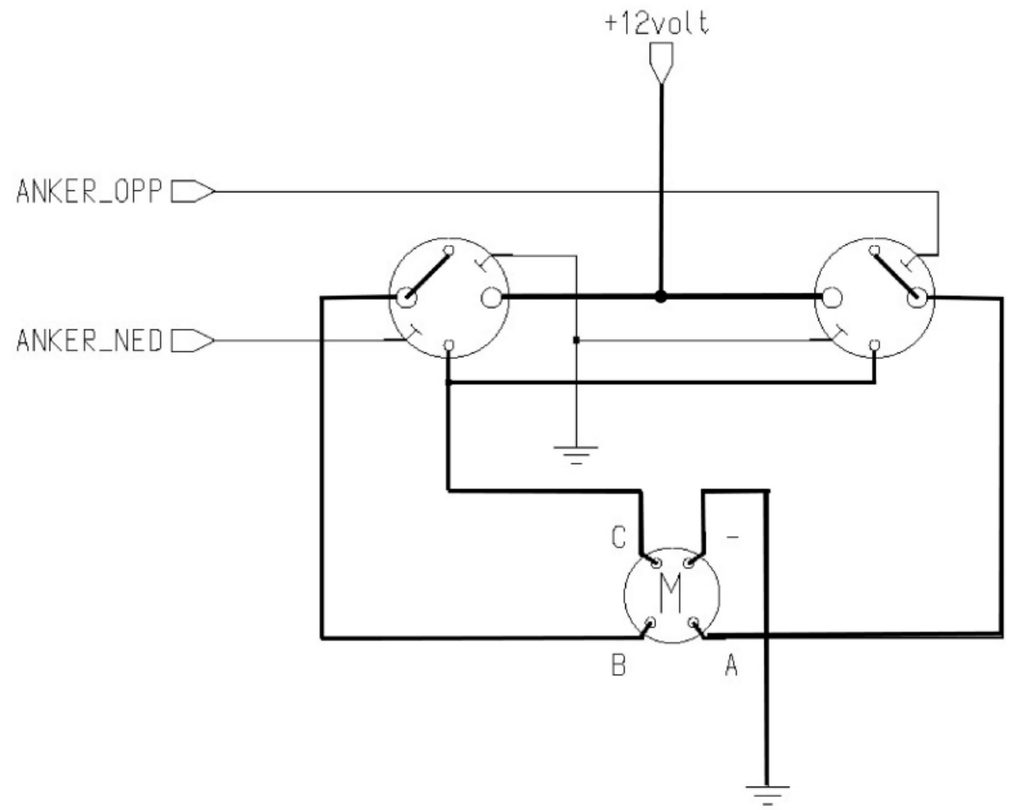


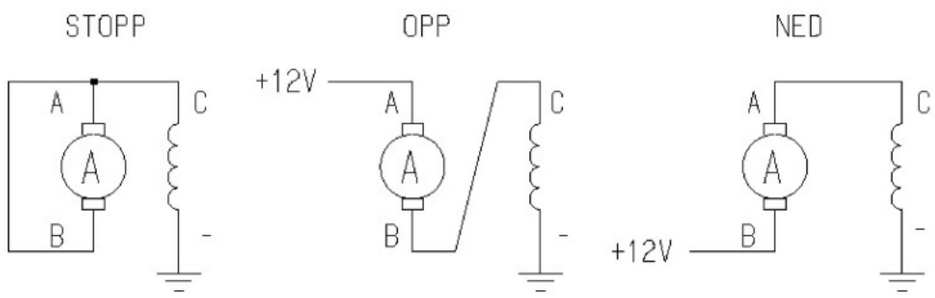


| | |
|---|---|
| Engineer: Lars H.Helgesen | **M/Y TRUDELUTT** |
| Drawn by: Lars H.Helgesen | |
| R&D CHK: | TITLE: **Anker vinsj** — Size: A4 |

| Path: | Changed by: | Date Changed: | Time: | Version: | REV | Drawing Number: | Page: |
|---|---|---|---|---|---|---|---|
| /user/lhh/priv_draw/DESIGN/diverse/anker_vinsj | lhh | Friday, March 6, 1998 | 2:40:19 pm | 13 | | | |

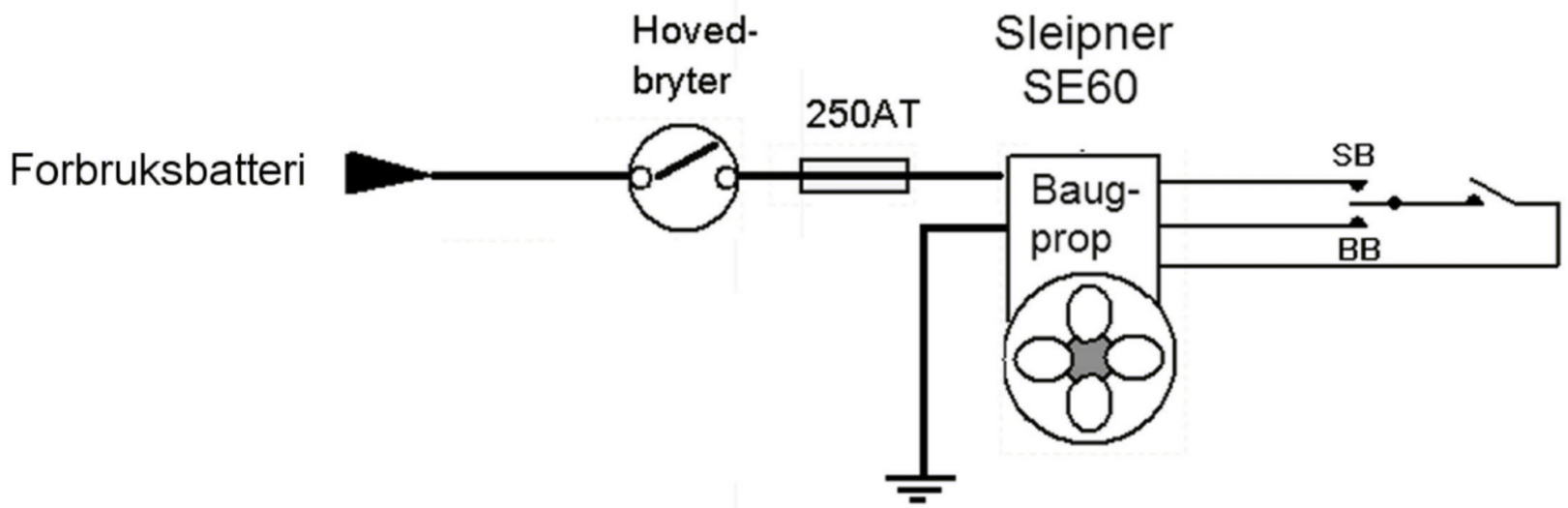


| | |
|---|---|
| Engineer: lhh | **M/Y TRUDELUTT** |
| Drawn by: lhh | |
| R&D CHK: | TITLE: **Baugpropell** — Size: A4 |

| Path: | Changed by: lhh | Date Changed: 25 mars 2017 | Time: | Version: | REV | Drawing Number: | Page: 1 |
|---|---|---|---|---|---|---|---|

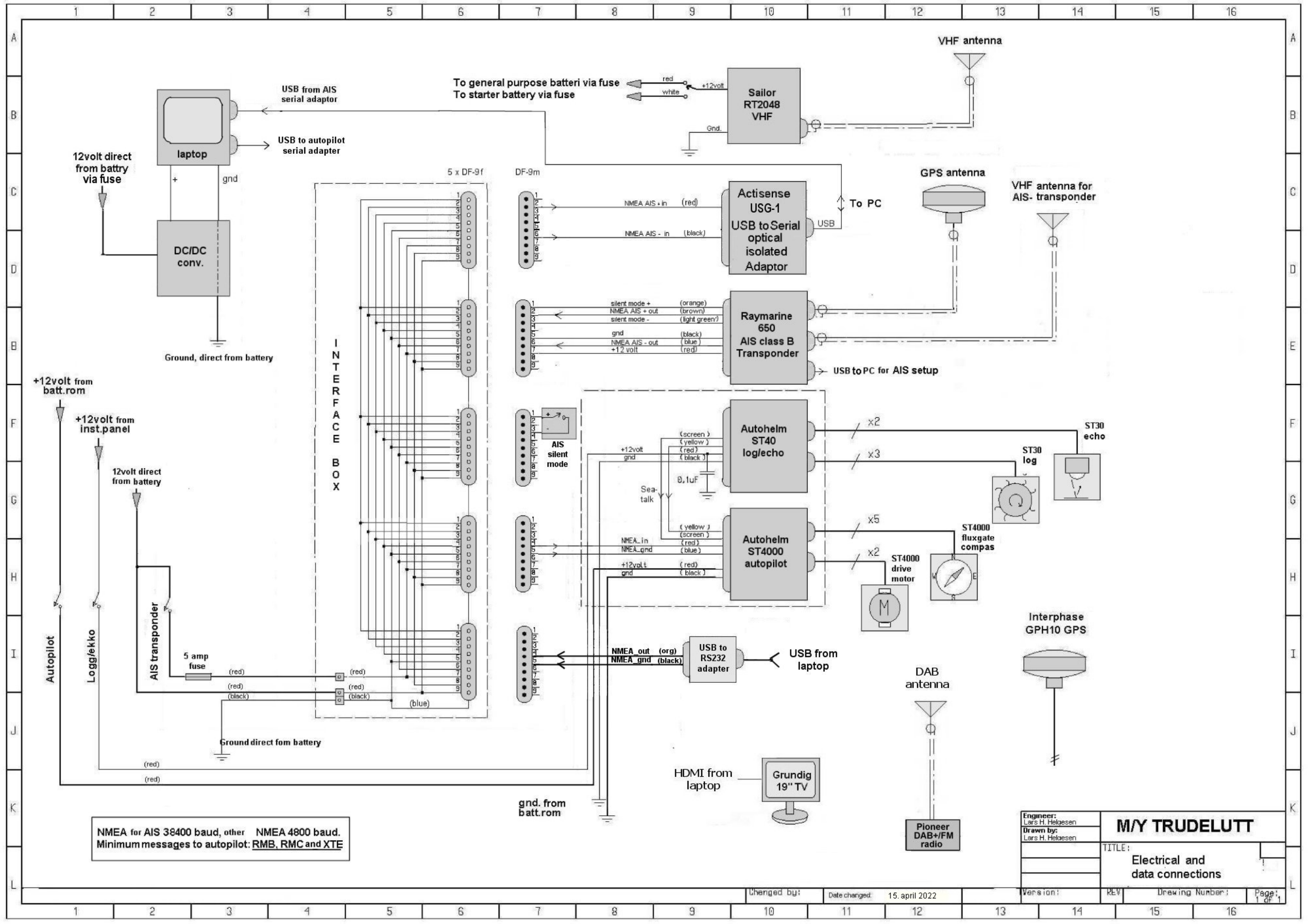
VHF antenna
To general purpose batteri via fuse
To starter battery via fuse
red
white
+12volt
Gnd.
Sailor RT2048 VHF
USB from AIS serial adaptor
USB to autopilot serial adapter
laptop
12volt direct from battry via fuse
+
gnd
DC/DC conv.
Ground, direct from battery
5 x DF-9f
DF-9m
INTERFACE BOX
NMEA AIS + in (red)
NMEA AIS - in (black)
Actisense USG-1 USB to Serial optical isolated Adaptor
USB
To PC
GPS antenna
VHF antenna for AIS- transponder
silent mode + (orange)
NMEA AIS + out (brown)
silent mode - (light green)
gnd (black)
NMEA AIS - out (blue)
+12 volt (red)
Raymarine 650 AIS class B Transponder
USB to PC for AIS setup
AIS silent mode
+12volt from batt.rom
+12volt from inst.panel
12volt direct from battery
Autopilot
Logg/ekko
AIS transponder
5 amp fuse
(red)
(black)
(blue)
Ground direct fom battery
(screen)
(yellow)
(red)
(black)
+12volt
gnd
0,1uF
Sea-talk
Autohelm ST40 log/echo
x2
x3
ST30 echo
ST30 log
NMEA_in
NMEA_gnd
Autohelm ST4000 autopilot
x5
x2
ST4000 fluxgate compas
ST4000 drive motor
NMEA_out (org)
NMEA_gnd (black)
USB to RS232 adapter
USB from laptop
Interphase GPH10 GPS
DAB antenna
HDMI from laptop
Grundig 19" TV
Pioneer DAB+/FM radio
gnd. from batt.rom
NMEA for AIS 38400 baud, other NMEA 4800 baud.
Minimum messages to autopilot: RMB, RMC and XTE
Engineer: Lars H. Helgesen
Drawn by: Lars H. Helgesen
M/Y TRUDELUTT
TITLE:
Electrical and data connections
Changed by:
Date changed: 15. april 2022
Version:
REV
Drawing Number:
Page: 1 of 1

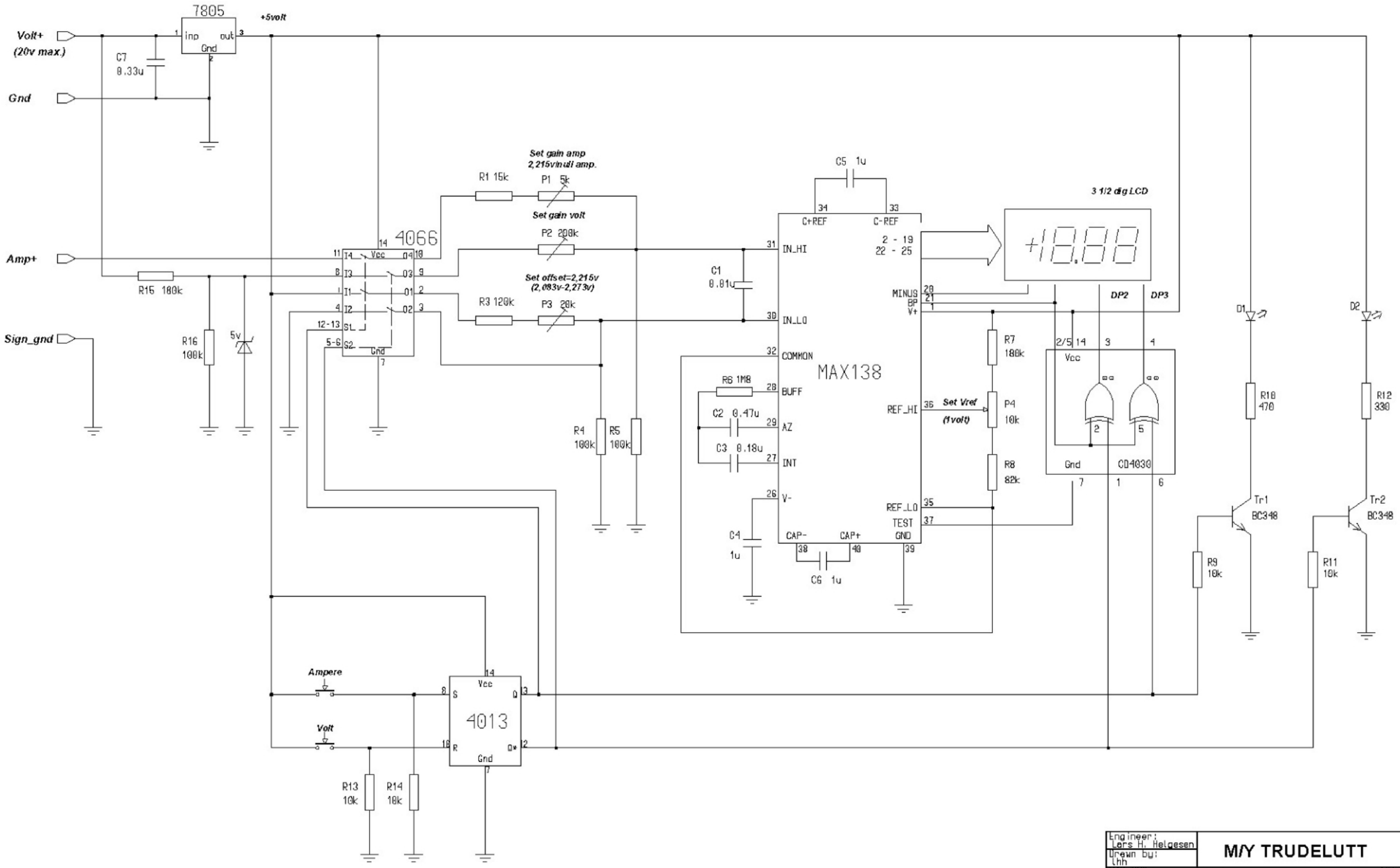


Engineer: Lars H. Helgesen
Drawn by: lhh
R&D CHK:

**M/Y TRUDELUTT**

TITLE: **Digitalt volt/amperemeter med LCD display**

Size: A3

Path: /user/lhh/priv_drew/DESIGN/instrumenter/komplett/amvolt_meter_MAX138

Changed by: lhh | Date Changed: Tuesday, March 17, 1998 | Time Changed: 9:08:30 am | Version: 3 | REV | Drawing Number: | Page: a_komplett

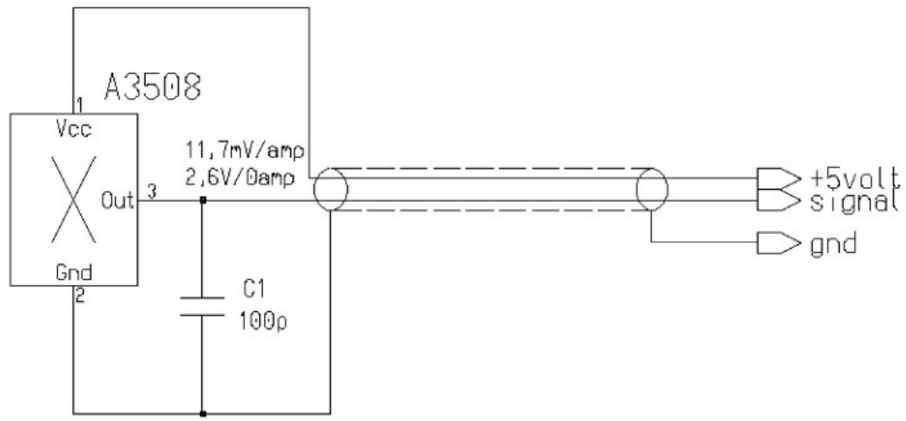


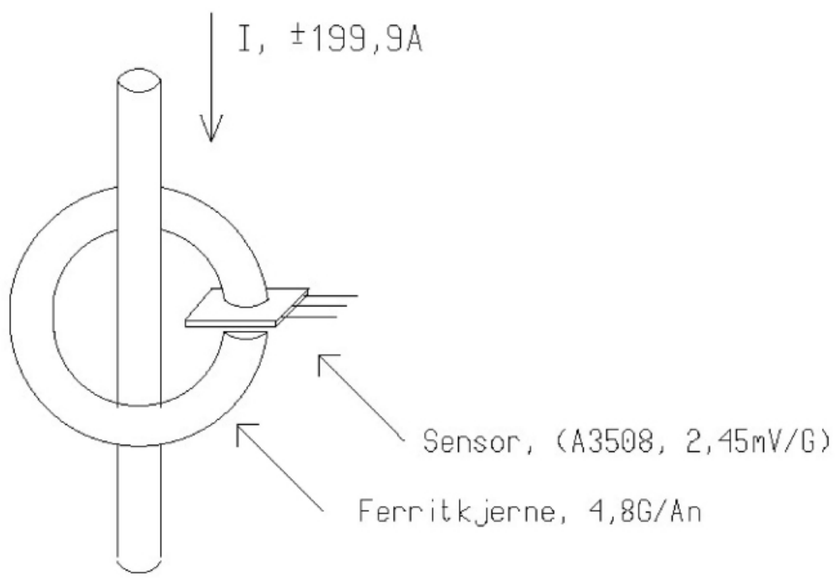


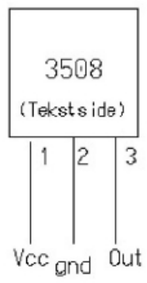


| | |
|---|---|
| Engineer: Lars H. Helgesen | **M/Y TRUDELUTT** |
| Drawn by: Lars H. Helgesen | |
| R&D CHK: | TITLE: **Stromprobe med A3508 hall-sensor** — Size: A4 |

| Path: | Changed by: | Date Changed: | Time: | Version: | REV | Drawing Number: | Page: |
|---|---|---|---|---|---|---|---|
| /user/lhh/priv_draw/DESIGN/instrumenter/komplett/amvolt_meter_MAX138 | lhh | Wednesday, March 4, 1998 | 1:16:15 pm | 1 | | | 1 |

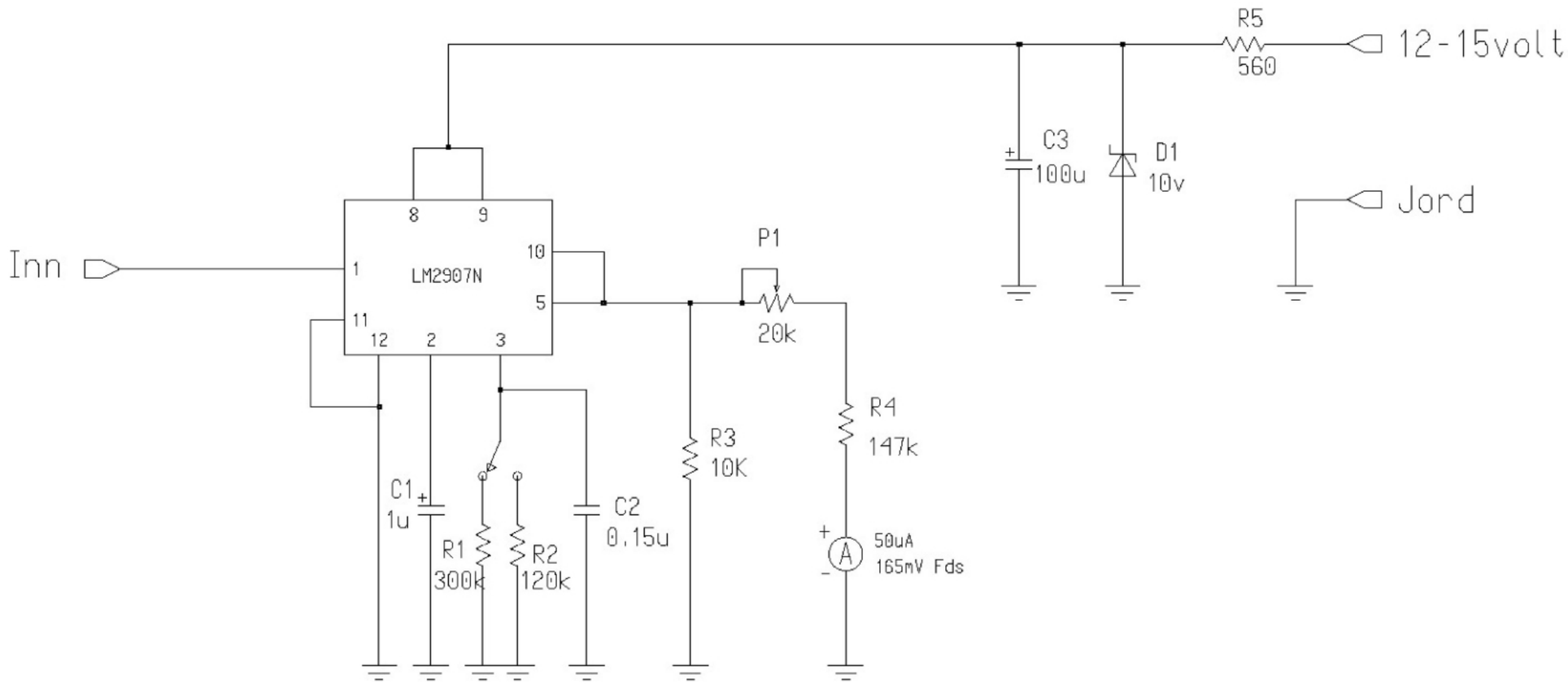


| | |
|---|---|
| Engineer: lhh | **M/Y TRUDELUTT** |
| Drawn by: lhh | |
| R&D CHK: | TITLE: **Vindmaler 0-10m/s og 0-25m/s** — Size: A4 |

| Path: | Changed by: | Date Changed: | Time: | Version: | REV | Drawing Number: | Page: |
|---|---|---|---|---|---|---|---|
| /user/lhh/priv_draw/DESIGN/vindmaler/vindmaler_LM2907 | lhh | Wednesday, July 25, 2001 | 10:01:32 am | 2 | | | 1 |

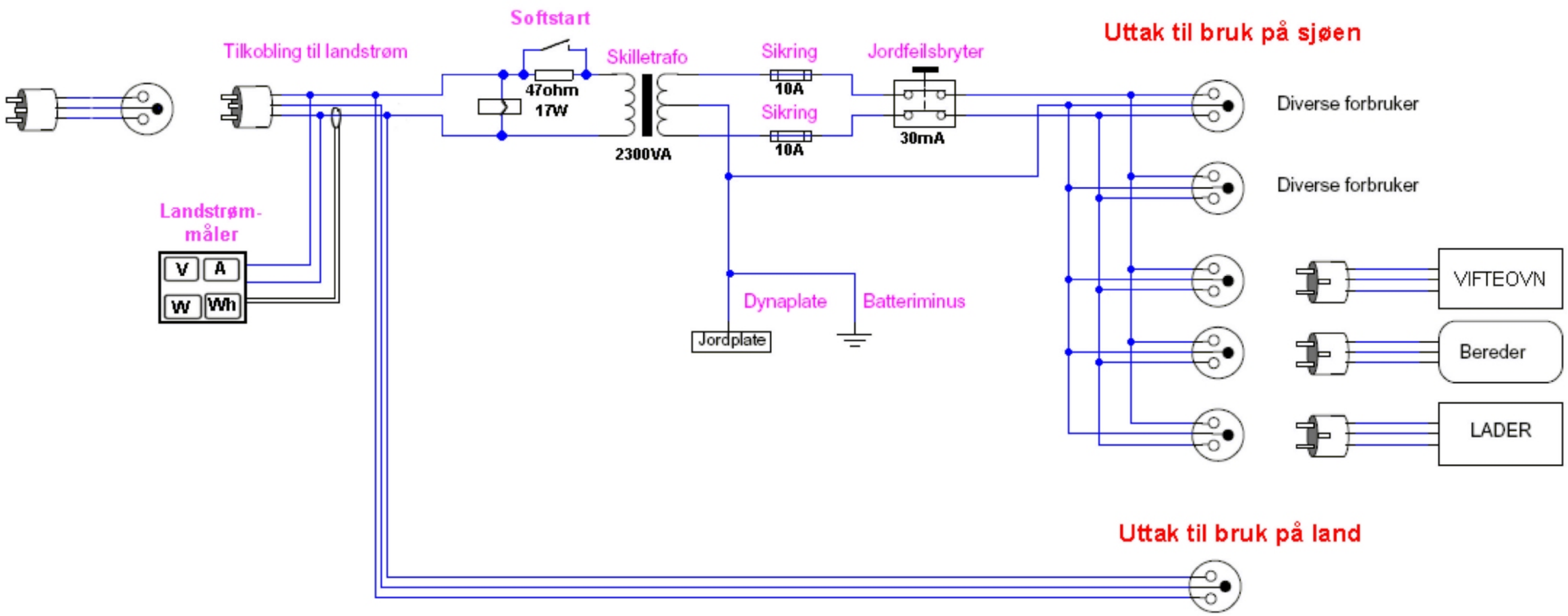


**M/Y TRUDELUTT**

UPDATED: 29. november 2016

TITLE: Landstrømsopplegg

# BlueSolar charge controller MPPT 75/15

www.victronenergy.com

**Solar charge controller**
**MPPT 75/15**

### Ultra fast Maximum Power Point Tracking (MPPT)

Especially in case of a clouded sky, when light intensity is changing continuously, an ultra fast MPPT controller will improve energy harvest by up to 30% compared to PWM charge controllers and by up to 10% compared to slower MPPT controllers.

### Load output

Over-discharge of the battery can be prevented by connecting all loads to the load output. The load output will disconnect the load when the battery has been discharged to a preset voltage.
Alternatively, an intelligent battery management algorithm can be chosen: see BatteryLife.
The load output is short circuit proof.
Some loads (especially inverters) can best be connected directly to the battery, and the inverter remote control connected to the load output. A special interface cable may be needed, please see the manual.

### BatteryLife: intelligent battery management

When a solar charge controller is not able to recharge the battery to its full capacity within one day, the result is often that the battery will be continually be cycled between a "partially charged" state and the "end of discharge" state. This mode of operation (no regular full recharge) will destroy a lead-acid battery within weeks or months.
The BatteryLife algorithm will monitor the state of charge of the battery and, if needed, day by day slightly increase the load disconnect level (i. e. disconnect the load earlier) until the harvested solar energy is sufficient to recharge the battery to nearly the full 100%. From that point onwards the load disconnect level will be modulated so that a nearly 100% recharge is achieved about once every week.

### Resin encapsulated electronics

Protects the electronic components against the environment.

### Automatic battery voltage recognition

The MPPT 75/15 will automatically adjust to a 12V or a 24V system.

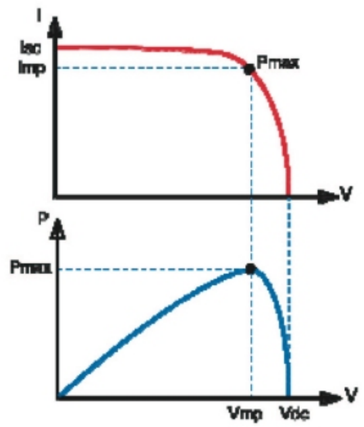


Maximum Power Point Tracking

**Upper curve:**
Output current (I) of a solar panel as function of output voltage (V).
The maximum power point (MPP) is the point Pmax along the curve where the product I x V reaches its peak.

**Lower curve:**
Output power P = I x V as function of output voltage.
When using a PWM (not MPPT) controller the output voltage of the solar panel will be nearly equal to the voltage of the battery, and will be lower than Vmp.

| BlueSolar charge controller | MPPT 75/15 |
|---|---|
| Battery voltage | 12/24 V Auto Select |
| Maximum battery current | 15 A |
| Maximum PV power, 12V 1a,b) | 200 W (MPPT range 15 V to 70 V) |
| Maximum PV power, 24V 1a,b) | 400 W (MPPT range 30 V to 70 V) |
| Automatic load disconnect | Yes, maximum load 15 A |
| Maximum PV open circuit voltage | 75 V |
| Peak efficiency | 98 % |
| Self consumption | 10 mA |
| Charge voltage 'absorption' | 14,4 V / 28,8 V |
| Charge voltage 'float' | 13,8 V / 27,6 V |
| Charge algorithm | multi-stage adaptive |
| Temperature compensation | -16 mV / °C resp. -32 mV / °C |
| Continuous/peak load current | 15A / 50A |
| Low voltage load disconnect | 11,1 V / 22,2 V or 11,8 V / 23,6 V<br>or BatteryLife algorithm |
| Low voltage load reconnect | 13,1 V / 26,2 V or 14 V / 28 V<br>or BatteryLife algorithm |
| Protection | Battery reverse polarity (fuse)<br>Output short circuit<br>Over temperature |
| Operating temperature | -30 to +60°C (full rated output up to 40°C) |
| Humidity | 100 %, non-condensing |
| Data communication port | VE.Direct<br>See the data communication white paper on our website |
| **ENCLOSURE** | |
| Colour | Blue (RAL 5012) |
| Power terminals | 6 mm² / AWG10 |
| Protection category | IP65 (electronic components) |
| Weight | 0,5 kg |
| Dimensions (h x w x d) | 100 x 113 x 40 mm |

1a) If more PV power is connected, the controller will limit input power to 200W resp. 400W
1b) PV voltage must exceed Vbat + 5V for the controller to start. Thereafter minimum PV voltage is Vbat + 1V

Victron Energy B.V. | De Paal 35 | 1351 JG Almere | The Netherlands
General phone: +31 (0)36 535 97 00 | Fax: +31 (0)36 535 97 40
E-mail: sales@victronenergy.com | **www.victronenergy.com**

Blue Power IP20 batteriladdare laddar och underhåller bly-syra batterier och förser användarna anslutna till batteriet med kraft.
DC kablarna är monterade med batteriklämmor för mobil användning (utom 12/25 & 2412). Ett par ringterminaler för 10 mm skruvmontering medföljer för permanent installation.

## Toppmodern mikroprocesser styr laddningsalgoritm

Anpassningsbar 4-stegs laddningskarakteristik: bulk - absorption - float - lagring
Blue Power IP20 laddare är försedd med ett mikroprocessorstyrt, anpassningsbart batterihanteringssystem. De anpassningsbara egenskaperna kommer automatiskt att optimera processen relativt det sätt som batteriet används på.
Rätt laddningsmängd: variabel absorptionstid
När enbart mindre urladdningar förekommer, hålls absorptionstiden nere för att förhindra överladdning av batteriet. Efter en större urladdning ökar absorptionstiden automatiskt för att säkerställa att batteriet laddas fullt ut.
Mindre underhåll och föråldring när batteriet inte används: Lagringsinställning
Efter absorptionsperioden, växlar Blue Power IP20 laddaren över till floatladdning och därefter, om batteriet inte är utsatt för urladdning, sätter lagringsinställningen in. I lagringsläge minskar floatspänningen till 2.2 V/cell (13.2 V för 12 V batteri) för att minimera gasning av och korrosion på de positiva plattorna. En gång i veckan höjs spänningen tillbaka till absorptionsnivån för att 'utjämna' batteriet. Denna egenskap förhindrar stratifiering av elektrolyten och sulfatering, en huvudorsak till tidigt fel i batteriet.

## Installations och användningsinstruktion

1. Batteriladdaren måste installeras i ett välventilerat utrymme nära batteriet (men inte ovanför batteriet på grund av eventuell korrosiv gas!)
2. Anslut batteriklämmorna eller terminalringarna på batteriet: Minuskabeln(svart) till minuspolen (-) på batteriet, pluskabeln (röd) till plus (+) polen på batteriet. Klämmor ingår inte för 12/25 & 2412.
3. Sätt in nätkabeln i vägguttaget. Laddningscykeln kan starta nu.

## LED indikering

Den gröna LED lampan lyser när laddaren är ansluten till en nätet.
Den gula LED lampan blinkar snabbt under bulkladdningen och långsammare under absorptionsladdningen. Den gula LED lampan lyser med stadigt ljus när laddningscykeln är slutförd

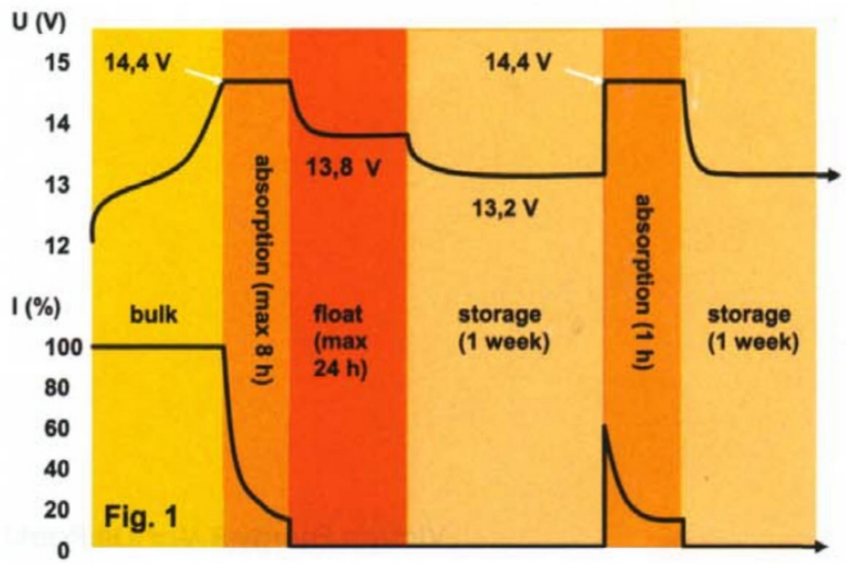

Fig. 1

victron energy
BLUE POWER

| Blue Power Charger IP 20 | 12/7 12/10 12/15 12/25 | 24/5 24/8 24/12 |
|---|---|---|
| Input voltage range | 180 – 265Vac or 250 – 350Vdc | |
| Frequency | 45-65 Hz | |
| Charge voltage 'absorption' (V DC) | 14,4 | 28,8 |
| Charge voltage 'float' (V DC) | 13,8 | 27,6 |
| Charge voltage 'storage' (V DC) | 13,2 | 26,4 |
| Charge current (A) | 7 / 10 / 15 / 25 | 5 / 8 / 12 |
| Charge characteristic | 4-stage adaptive | |
| Minimum battery capacity (Ah) | 24 / 36 / 55 / 90 | 16 / 24 / 40 |
| Can be used as power supply | √ | √ |
| Protection | Battery reverse polarity (ATO Fuse Blade) Output short circuit Over temperature | |
| DC Fuse - ATO Blade (A) | 10 / 15 / 20 / 30 | 10 / 10 / 20 |
| Operating temp. range | -20 to +60°C (full rated output up to 40°C) | |
| Humidity (non condensing) | Max 95 % | |
| **ENCLOSURE** | | |
| Material & Colour | aluminium (blue RAL 5012) | |
| Battery-connection | Black and Red cable of 1,5 meter | |
| 230 V AC-connection | Cable of 1,5 meter with Europe class 1 plug (CE certified) | |
| Protection category | IP 20 | |
| Weight (kg) | 1,1 | |
| Dimensions (h x w x d in mm) | 50 x 85 x 200 | |
| **STANDARDS** | | |
| Safety | EN 60335-1, EN 60335-2-29 | |
| Emission | EN 55014-1, EN 61000-3-2 | |
| Immunity | EN 55014-2, EN 61000-3-3 | |

# BMV 700 series: Precision Battery Monitoring

www.victronenergy.com

**BMV 700**

**BMV shunt 500A/50mV**
With quick connect pcb

### Battery 'fuel gauge', time-to-go indicator, and much more

The remaining battery capacity depends on the ampere-hours consumed, discharge current, temperature and the age of the battery. Complex software algorithms are needed to take all these variables into account.

Next to the basic display options, such as voltage, current and ampere-hours consumed, the BMV-700 series also displays state of charge, time to go, and power consumption in Watts.

The BMV-702 features an additional input which can be programmed to measure the voltage (of a second battery), temperature or midpoint voltage (see below).

### Easy to program

A quick install menu and a detailed setup menu with scrolling texts assists the user when going through the various settings. Please consult the manual for details.

### Standard features

- Battery voltage, current, power, ampere-hours consumed and state of charge
- Time to go at the current rate of discharge
- Programmable visual and audible alarm
- Programmable relay, to turn off non critical loads or to run a generator when needed.
- 500 Amp quick connect shunt and connection kit
- Shunt selection capability up to 10.000 Amps
- VE.Direct communication port
- Stores a wide range of historical events, which can be used to evaluate usage patterns and battery health
- Wide input voltage range: 9,5 – 95 V
- High current measurement resolution: 10 mA (0,01A)
- Low current consumption: 2,9 Ah per month (4 mA) @12V and 2,2 Ah per month (3mA) @ 24V

| Battery monitor | BMV 700 | BMV 702<br>BMV 702 BLACK | BMV 700HS |
|---|---|---|---|
| Supply voltage range | 6,5 - 95 VDC | 6,5 - 95 VDC | 60 – 385 VDC |
| Current draw, back light off | < 4 mA | < 4 mA | < 4 mA |
| Input voltage range, auxiliary battery | n.a. | 6,5 - 95 VDC | n.a. |
| Battery capacity (Ah) | 20 - 9999 Ah | | |
| Operating temperature range | -20 +50°C (0 - 120°F) | | |
| Measures voltage of second battery, or temperature, or midpoint | No | Yes | No |
| Temperature measurement range | -20 +50°C | | n.a. |
| VE.Direct communication port | Yes | Yes | Yes |
| Relay | 60V/1A normally open (function can be inverted) | | |
| **RESOLUTION & ACCURACY (with a 500 A shunt)** | | | |
| Current | ± 0,01 A | | |
| Voltage | ± 0,01 V | | |
| Amp hours | ± 0,1 Ah | | |
| State of charge (0 – 100 %) | ± 0,1 % | | |
| Time to go | ± 1 min | | |
| Temperature (0 - 50°C or 30 - 120°F) | n. a. | ± 1 °C/°F | n. a. |
| Accuracy of current measurement | ± 0,4 % | | |
| Accuracy of voltage measurement | ± 0,3 % | | |
| **INSTALLATION & DIMENSIONS** | | | |
| Installation | Flush mount | | |
| Front | 63 mm diameter | | |
| Front bezel | 69 x 69 mm (2.7 x 2.7 inch) | | |
| Body diameter | 52mm (2.0 inch) | | |
| Body depth | 31mm (1.2 inch) | | |
| **STANDARDS** | | | |
| Safety | EN 60335-1 | | |
| Emission / Immunity | EN 55014-1 / EN 55014-2 | | |
| Automotive | ECE R10-4 / EN 50498 | | |
| **ACCESSORIES** | | | |
| Shunt (included) | 500 A / 50 mV | | |
| Cables (included) | 10 meter 6 core UTP with RJ12 connectors, and cable with fuse for '+' connection | | |
| Temperature sensor | Optional (ASS000100000) | | |